International Workshop
“Bio-Inspired Information Pathways”

Abstracts

This workshop and the research presented by the members of the CRC 1461 was funded by the Deutsche Forschungsgemeinschaft (DFG, German Research Foundation) – Project-ID 434434223 – SFB 1461. CogniCron would like to acknowledge the financial support of the Ubbo Emmius Funds (University of Groningen).

Kick-off Talk (online)

Fungal Neuroscience

Andrew Adamatzky

Unconventional Computing Lab, UWE, Bristol, UK

We overview electrical properties of fungi and demonstrate — in computer models and experimental laboratory studies — that fungi can perceive and process information in a way similar to neural networks. We present fungal neuromorphic electronics — a family of living electronic devices made of mycelium bound composites or pure mycelium. Fungal neuromorphic devices are capable of changing their impedance and generating spikes of electrical potential in response to external control parameters. Fungal neuromorphic circuits can be embedded into fungal materials and wearables or used as stand alone sensing and computing devices. The talk comprises three parts: fungal electronics, fungal computing and fungal language. In fungal electronics we discuss the following devices. Experiments have shown that fungi exhibit memristive properties when subject to a voltage sweep. A fungal oscillator is built on the endogenous fluctuations in the electrical resistance of mycelium bound composites. Tactile sensing of fungal neuromorphic devices is demonstrated in experiments with fungal blocks which can tell whether weight was applied or removed because they respond to weight application with higher amplitude and longer duration spikes than spikes responding to weight removal. Optical fungal sensors are based on the living fungal materials responding to illumination by changing their electrical activity; the fungal materials can be incorporated in logical circuits and actuators with optical inputs. Fungal chemical sensors are demonstrated to efficiently differentiate between chemical stimuli by producing a unique pattern of electrical activity. Fungal computing can be of two types: electrical analog and voltage spikes based. In numerical modeling and experimental laboratory setup we exploited principles of electrical analog computing. The talks end with a speculative comparison of patterns of fungal electrical activity with human language.

Scientific Biography

Andrew Adamatzky is Professor of Unconventional Computing and Director of the Unconventional Computing Laboratory, Department of Computer Science, University of the West of England, Bristol, UK. He does research in molecular computing, reaction-diffusion computing, collision-based computing, cellular automata, slime mould computing, massive parallel computation, applied mathematics, complexity, nature-inspired optimisation, collective intelligence and robotics, bionics, computational psychology, non-linear science, novel hardware, and future and emergent computation. He has authored seven books, mostly notable are ‘Reaction-Diffusion Computing’, ‘Dynamics of Crow Minds’, and ‘Physarum Machines’, and has edited 22 books in computing, most notable are ‘Collision Based Computing’, ‘Game of Life Cellular Automata’, and ‘Memristor Networks’. He has also produced a series of influential artworks published in the atlas ‘Silence of Slime Mould’. He is Founding Editor-in-Chief of ‘J of Cellular Automata’ and ‘J of Unconventional Computing’ and Editor-in-Chief of ‘J Parallel, Emergent, Distributed Systems’ and ‘Parallel Processing Letters’.

Poster session by doctoral candidates from the University of Groningen and CRC 1461

Programming Physical Computers: Reservoir Computing and Beyond

Steven Abreu, Herbert Jaeger

The value of computers depends crucially on our ability to program them for relevant tasks. Modern computer programming was developed for digital computers, which exploit the physical bi-stability in electronic circuits and memory devices. In contrast, physical computers may explore an unbounded range of materials and physical effects for computation, but programming methods for such computers are not mature yet. Physical reservoir computing is an early approach to programming physical computers, where the computer is modeled as a high-dimensional, nonlinear “blackbox” reservoir with few tunable parameters. This typically serves as a proof-of-concept that some substrate can be made to compute but does not parallel the richness of digital programming. Clearly, physical systems have potential far beyond what reservoir computing can harness and new programming paradigms are needed to fully domesticate the power of physical computers. This poster presents ideas on how to develop new ways of programming physical systems, with examples from neuromorphic and photonic computers.

Photocatalytic Conductive Gold Deposition on Titanium Dioxide Templates Mimicking Axonal Growth

Fatemeh Abshari, Moritz Paulsen, Jan Schardt, Blessing Adejube, Salih Veziroglu, Alexander Vahl, Martina Gerken

While memristive devices have gathered high interest in the scientific community for their capability to technically mimic synaptic connections, lesser attention has been given to long-range global plasticity in artificial neuronal networks. The aim of our research is to use light-stimulated growth to technically mimic the growth of long-range axonal connections in these networks. We use photocatalytic reduction from a pre-cursor solution as a dynamic tool to grow conductive gold lines on structured titanium dioxide templates to mimic axonal growth. We successfully obtained electrical conductivity of grown gold as shown in Fig. 1. The structure of the grown gold is analysed with 3D laser interference microscopy.

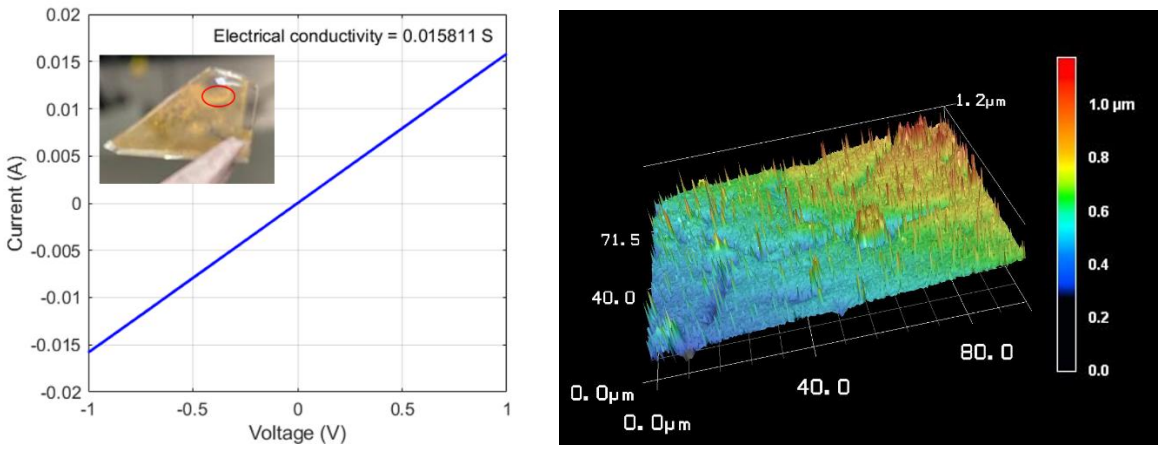

Figure 1: Left: Current Voltage plot of grown gold in specified range. Right: 3D laser interference microscopy image of grown gold on TiO2

An Ideal Electrical Circuit for Guided Axon-Growth

Bakr Al Beattie

Axon growth and guidance play a key role in the ontogeny of non-artificial neuronal networks. In particular, they are natural self-organization mechanisms that are often neglected in many electrical realizations of neuronal networks. To compensate the lack of a missing circuit realization for guided axon-growth, we synthesize an electrical circuit implementing this mechanism. Here, the circuit mimics the axon's ability to grow in dependence of the concentration gradient of so-called guidance cues. Our circuit synthesis is based on the wave digital modeling approach, where we first derive an adequate wave flow diagram and subsequently deduce the corresponding electrical circuit. The resulting circuit exploits memristive Jaumann structures with memsensors for implementing the gradient dependent growthmechanism. Emulation results of a 10 × 10 concentration plane reveal the circuit to exhibit a form of unsupervised decisionmaking, where it selects the path with the highest concentration gradient.

Piezoelectric Field Effect Transistor Based on AlScN for Tactile Sensing

Rafael Ashkrizzadeh, Adrian Petraru, Hermann Kohlstedt

Field effect transistors are among the most important electrical components and are used in almost every electrical device. By adding a piezoelectric layer of AlScN in the gate of the transistor, the transistor is converted into a sensor that is sensitive to pressure in the form of an applied force. By implementing the sensitive layer in the gate, the signal is simultaneously amplified by the properties of a normal transistor. If a force acts on the sensor, this can be clearly seen in the output current of the sensor since this increase in proportion to the acting force. These sensors are to be linked to form a matrix whose output signal is then evaluated by an ASIC (application specific integrated circuit) and converted into neuronal spikes at the end.

Modelling Neurogenesis in Spiking Neural Networks

Maximilian Brütt

Neurogenesis is the process of new neurons springing into existence. It takes place in developing nervous systems, but also in regenerative contexts as the dentate gyrus area of the hippocampus or the central nerve system of *Schmidtea mediterranea*. In recent years, there has been more and more evidence of neurogenesis in adult mammals, and more specifically in humans. Yet, the underlying mechanisms of neurogenesis and why it is confined to only specific parts of the adult brain are far from fully understood. Utilizing an abstraction via the comparatively simple nervous system of *S. mediterranea*, neurogenesis is studied in artificial spiking neural networks of small scale (n = 100). Focus points are the behavior of cells newly introduced into a pre-existing network and the interaction between sudden network trauma (as in strokes) and resource-based neural blooming. Different network environments are considered, as *S. mediterranea* is capable of dynamically altering its nervous system's size depending on available resources.

Analysis of Mixed Memristor-Resistor Model for Neuromorphic Networks

Davide Cipollini, Lambert R. B. Schomaker, Beatriz Noheda

In this work we analyse a model of disordered memristor-resistor networks. Under the framework of graph theory, only a fraction of the network edges has memrisitive properties, the remaining part has pure Ohmic behaviour. This model is well suited for simulation of neuromorphic materials that show the presence of impurities not reducible to a pure memristor network, in order to shed light on their rich behaviour and explore potential application. We report results of extensive simulation and analysis of both electric and entropic behaviour of the network. We report weakly memrisitive behaviour below the percolation threshold and a potential second-order phase transition at the percolation point detected with classical network entropy. Such a transition is matched with stronger Winner-Take-All Path. Finally, we investigate the transformation of the network under the application of a DC signal with von Neumann network entropy borrowed from quantum mechanics. We show richer self-emerging complexity for mixed-elements networks compared to networks whose edges are all memristors.

Distributed Finite State Machines in Hyperdimensional Hopfield Networks

Madison Cotteret, Hugh Greatorex, Elisabetta Chicca

Hopfield networks are robust distributed models of human memory. We propose construction rules such that the network may implement an arbitrary finite state machine (FSM), where states are high dimensional dense patterns of activity, and all dynamics are stored in the weights matrix in a fully distributed manner. We show that the network is robust to imprecise and noisy weights, and so a prime candidate for implementation with high-density but unreliable devices. By bridging the gap between Hopfield networks and FSMs, we propose a plausible path by which FSMs may arise as an emergent computational primitive in biological neural networks.

Towards Reward-Based Learning on Neuromorphic-Integrated Robots

Maxime Fabre, Elisabetta Chicca

Neuromorphic hardware (NMHW) emulates neural networks behaviors to perform artificial intelligence tasks at ultra-low power and latency [1]. The neuromorphic approach also allows to explore a new range of learning protocols that can be run directly on NMHW in real-time and continuously [2]. These always-on on-chip learning protocols however present a significant challenge when deployed at the edge as their training cannot be supervised with labeled data, which is usually preferred to obtain the best performances. Thus, we propose to study rewardbased learning on NMHW for an all-integrated neuromorphic robotic approach. With this setup, the reward can be used as a naturally present form of supervision while still guiding the robot to a desired mode of operation in comparison to unsupervised algorithms [3]. This approach nevertheless poses algorithmic challenges and requires specific neuromorphic circuitry, both of which are explored here.

[1] Elisabetta Chicca, Fabio Stefanini, Chiara Bartolozzi, and Giacomo Indiveri. Neuromorphic electronic circuits for building autonomous cognitive systems. Proceedings of the IEEE, 102(9):1367–1388, 2014.
[2] Melika Payvand, Mohammed E. Fouda, Fadi Kurdahi, Ahmed M. Eltawil, and Emre O. Neftci. On-Chip Error-Triggered Learning of Multi-Layer Memristive Spiking Neural Networks. IEEE Journal on Emerging and Selected Topics in Circuits and Systems, 10(4):522–535, 2020.
[3] Dongshu Wang, Yuhang Hu, and Tianlei Ma. Mobile robot navigation with the combination of supervised learning in cerebellum and reward-based learning in basal ganglia. Cognitive Systems Research, 59:1–14, 2020.

Bioinspired Memsensors Based on Ag Alloy Nanoparticles and ZnO Tetrapods

Rohit Gupta, Roshani Madurawala, Nico Carstens, Maik-Ivo Terasa, Sören Kaps, Thomas Strunskus, Franz Faupel, Rainer Adelung, Alexander Vahl

The advancement of neuromorphic engineering offers great potential to create novel electronics inspired by brain functionalities. One of the bottlenecks in achieving this is the combined data detection and processing in single devices. Memsensor is one such two terminal devices combining the functionalities of memristive and sensor devices. It is highly promising in the field of neuromorphic engineering and has the capability to mimic aspects of neurons and synapses in future electronics. In this work, a memristive system of SiOxNy/AgNPs/SiOxNy is considered. Tailored Ag alloy nanoparticles (NPs) embedded in a SiOxNy dielectric matrix are used in a multi-stack set-up fabricated by Gas Aggregation Source (GAS) to realize a broad range of filamentary type of switching (diffusive and bipolar) characteristics. To incorporate the sensor features into the device, tetrapodal ZnO (t-ZnO) which increases its conductivity under the influence of the UV light, is used. The t-ZnO sensors are fabricated via Direct Ink Writing. Therefore, it is analyzed how the switching performance of the memsensor device is modulated under the application of UV light. Such an approach will help in understanding and implementing memsensor functionalities with filamentary switching processes in detail.

Time to First Spike Encoding Using the Time Difference Encoder

Hugh Greatorex, Elisabetta Chicca

The Time Difference Encoder (TDE) is a neuromorphic primitive that can be applied across multiple sensory modalities to perform low latency computation on event-based signals [1,2]. A single TDE converts the time difference between two input events into a burst of spikes, the dynamics of which are determined by the magnitude and polarity of the time difference. In this work we explore how these dynamics can be exploited to tune a network that can sort input spikes by their time difference. This is achieved by distributing TDE parameters in a single layer over a specific space to allow for timing features to be distinguished using only the first spike. This not only provides evidence that more complex networks employing TDE layers can be decisive on the first spike but also opens up the possibility of using such a network to perform ultra low latency computation for fast decision making.

[1] Daniel Gutierrez-Galan, Thorben Schoepe, Juan P. Dominguez-Morales, Angel Jimenez-Fernandez, Elisabetta Chicca, and Alejandro Linares-Barranco. An event-based digital time difference encoder model implementation for neuromorphic systems. IEEE Transactions on Neural Networks and Learning Systems, pages 1–15, 2021.
[2] M. B. Milde, O. J. N. Bertrand, H. Ramachandran, M. Egelhaaf, and E. Chicca. Spiking Elementary Motion Detector in Neuromorphic Systems. Neural Computation, 30(9):2384–2417, 09, 2018.

Fabrication and Characterization of MoS_2 Aero-Structures in a Li-Ion Battery Application with Cyclic Voltammetry and Post-mortem TEM Investigations

Pia Holtz, Hendrik Groß

Although the brain seems complex, there are some striking similarities to alkaline batteries: both function with a liquid-electrolyte-based electrochemical system, enabling them to store energy with different kinds of charge carriers. In this study, a special 3D network is designed to mimic the spatial arrangement of a neuron inside the brain. The network is assembled using tetrapodal building blocks of sacrificial ZnO, which are coated via infiltration with the 2D transition metal dichalcogenide (TMDC) molybdenum disulfide (MoS2) and exfoliated graphene (EG). The light, mechanically-stable and 3D-shaped TMDC is then used as the anode of a battery. The system is characterized by cyclic voltammetry (CV) and post-mortem TEM analyses.The CV analysis shows an irreversible altering of the layered structure to an amorphous state, caused by the application of a potential of 0.01 V. However, the structure stays intact by changing the cycle limit to 0.8 V, as shown with a post-mortem SEAD TEM analysis.

Modelling of Networks of Memristors

Anne-Men Huijzer, Arjan van der Schaft, Bart Besselink

In this work, we introduce a mathematical framework to study the behavior of networks of memristors. We show that the memristive behavior of such a network is preserved on external branches, i.e. the branches connecting the network to an external source. This result is a generalization of Chua's closure theorem that states that "a one-port containing only memristors is equivalent to a memristor". The result can be used as a first step in the direction of modelling neuromorphic computing systems as nonlinear electrical circuits with memristors.

Q-Mat: A Qualitative Physics Engine for Simulating Material Dynamics

Fabian IJpelaar, Herbert Jaeger

Moving past digital technologies may require the use of new materials that are often still ill-understood. Gathering experimental data is important but costly and time-intensive, stifling the progress of theory development. With the Q-Mat project, we will investigate fast simulation methods of such materials by conceding numerical accuracy for speed. Our aim is to develop a "qualitative simulation engine" that can aid theory building in the field of neuromorphic computing. Currently, we are working on a toolbox for the simulation of thermal effects of Ising models, based on the well-known Metropolis sampling algorithm. We will show some images created with this toolbox.

An Electrical Circuit for Hindmarsh-Rose-like Neuronal Dynamics

Sebastian Jenderny, Karlheinz Ochs, Philipp Hövel

While today's computers might be able to rival the capabilities of neuronal networks in terms of e.g. pattern recognition, they are still far inferior regarding energy-efficiency. Energy-efficiency might be improved by gaining a deeper understanding of the mechanisms of real neuronal networks and deriving design principles for electrical circuits. To this end, functional network growth of real neuronal networks can be studied. This requires network models containing neuron models. Here, the Hindmarsh-Rose model offers especially rich neuronal dynamics, for which an equivalent electrical circuit has recently been synthesized. As this circuit contains several nonlinear circuit elements, our aim is to simplify this circuit and compare its dynamics to the original model based on a bifurcation analysis. In a next step, we will use this circuit for the design of a neuronal network model and verify the resulting circuit by wave digital emulations. This will allow the study of biological functions such as locomotion and body contractions.

Domain Wall Conductivity in Calcium Doped Bismuth Ferrite Thin Films

Foelke Janssen, Jan Rieck, Beatriz Noeheda

Bismuth ferrite (BFO) is one of the most promising multiferroic materials, with interest for its usage in energy-efficient memory storage devices. In BFO thin films, the formation of domains with different orientations of the electric polarisation results in the emergence of domain walls that have different properties than the host material, e.g. an increased conductivity. As-grown BFO thin films, pervaded by conductive domain walls, could enable nanometer-sized devices based on resistive switching [1], [2], [3]. In this project the influence of Calcium doping on the domain wall formation and conductivity of BFO thin films is investigated. Thin films were grown using pulsed laser deposition on $SrTiO_3$ substrates with and without a $SrRuO_3$ bottom electrode. Piezo force microscopy and conductive atomic force microscopy images reveal an increased number of domain walls compared to pristine BFO thin films, leading to closed-meshed domain wall networks. The properties of these networks, which display hysteretic IV-curves, are presented.

[1] Farokhipoor, S.; Noheda, B. Conduction through 71° domain walls in BiFeO3 thin films Phys. Rev. Lett. 2011, 107, 127601.
[2] Zhang, Y.; Lu, H.; Yan, X.; Cheng, X.; Xie, L.; Aoki, T.; Li, L.; Heikes, C.; Lau, S. P.; Schlom, D. G.; Chen, L.; Gruverman, A.; Pan, X. Intrinsic Conductance of Domain Walls in BiFeO3 Adv. Mater., 2019, 31, 1902099.
[3] Catalan, G.; Seidel, J.; Ramesh, R.; Scott, J. F. Domain wall nanoelectronics Rev. Mod. Phys. 2012, 84, 119-156.

Integrate-and-fire Neuron Circuits Using HfO_2-based Ferroelectric Field Effect Transistors

Philipp Klein, Erika Covi, Halid Mulaosmanovic, Stefan Slesazeck, Elisabetta Chicca

Inspired by neurobiological systems, spiking neural networks are gaining interest for biologically plausible machine learning. The realization of CMOS circuits replicating neuronal features, namely the integration of action potentials and firing according to the all-or-nothing law, imposes area and power consumption challenges. The non-volatile storage of polarization states and accumulative switching behavior of nanoscale HfO2-based Ferroelectric Field-Effect Transistors [1], promise to circumvent these issues. We proposed two FeFET-based neuronal circuits emulating the Integrate-and-Fire behavior of biological neurons based on simulations [2]. In our implementations, we sensed changes of the ferroelectric devices' polarization state by comparing the current flow through the FeFET with a fixed reference current. By applying consecutive programming pulses (input spikes) the polarization and thus the threshold voltage of the device changes. We fabricated the circuits in the GlobalFoundries 28nm HKMG technology. Preliminary measurements performed on the circuits show a sensitivity to the amplitude and length of the applied programming pulses and the reference current.

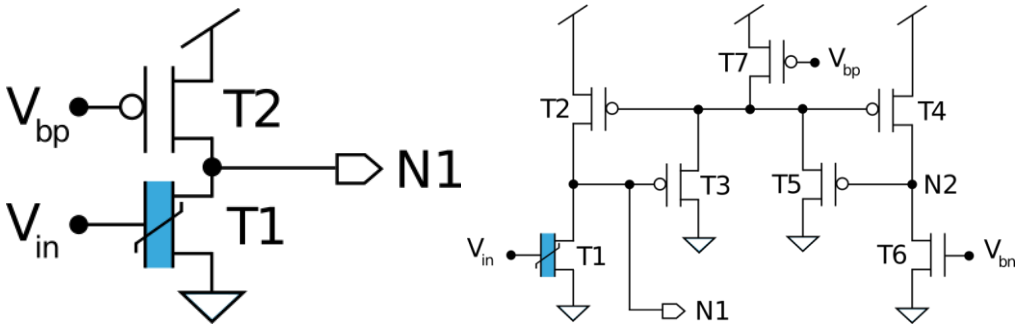

(a) (b)

Figure 1: Schematics of the 2-transistor circuit (a) and 7-transistor circuit (b). T1 represents the n-type ferroelectric field effect transistor (nFeFET). Input pulses and the read voltage (Vin) are applied at the T1 gate. The bias voltages Vbp in (a) and Vbn in (b) control the reference current. The input programming pulses change the polarization and the threshold voltage of the nFeFET and thus the current flow during the read phase. The amplitude of the reference current controls the number of program pulses needed to induce a shift to the potential at node N1 during a read phase. The shift of the voltage at node N1 is sensed by additional circuits to generate an output spike. The 7-transistor implementation trades a higher transistor count for an increased flexibility for biasing the circuit.

[1] Mulaosmanovic, H. et al. Investigation of accumulative switching in ferroelectric fets: Enabling universal modeling of the switching behavior. IEEE Transactions on Electron Devices 67, 5804–5809 (2020).
[2] Suresh, B. et al. Simulation of integrate-and-fire neuron circuits using hfo2-based ferroelectric field effect transistors. 2019 26th IEEE International Conference on Electronics, Circuits and Systems (ICECS) (2019).

Characterization of SiO_x/Cu/SiO_x Memristive Devices from Experiments and Simulations

Rouven Lamprecht, Luca Vialetto, Richard Marquardt, Finn Zahari, C. Stüwe, Torben Hemke, Thomas Mussenbrock, Jan Trieschmann, Hermann Kohlstedt

Memristive devices for neuromorphic circuits are an emerging nano-technology promising for bioinspired computing architectures [1]. Based on a metal-oxide switching layer between two metal-electrodes in a capacitor-like layer sequence, these devices exhibit variable resistance states in accordance to previously applied voltages. As a result of this property, they can be considered as an electronic pendant to synapses in the nervous system [2]. However, the features of memristive devices have to be carefully engineered with respect to a particular application. In this study, we combine an experimental and modeling approach to systematically characterize the electrical properties of memristive devices that have been fabricated under different operational conditions. On the one hand, the experiments provide local measurements of current-voltage characteristics of TiN/SiO_x/Cu(O)/SiO_x/TiN memristive devices. On the other hand, the simulations provide insights into the fabrication conditions by modeling both the deposition source (thermal evaporation and magnetron sputtering) and the thin film properties (film composition, roughness, and porosity). As a result of the study, we correlate the measured electrical device properties with simulated parameters to provide insights into the key operational parameters influencing the memristive behavior.

[1] Rahimi Azghadi, M., Chen, Y., Eshraghian, J.K., Chen, J., Lin, C., Amirsoleimani, A., Mehonic, A., Kenyon, A.J., Fowler, B., Lee, J.C. and Chang, Y. (2020), Adv. Intell. Syst., 2: 1900189.
[2] Regina Dittmann, J. P. Strachan (2019), Applied Physics Letters Materials 7, 110903.

Compact Modeling of Nanocluster Functionality as a Higher-Order Neuron

Celestine P. Lawrence

Disordered nanoclusters with multielectrode input–output functionality have energy-efficient and emergent computational capacity. To aid the design of an interconnected network of such nanoclusters for neuromorphic functionality, here we show that nanocluster functionality can be fit to a dendritic neuron model with multiplicative interactions. This work brings into the spotlight higher-order neural networks (known for their efficient encoding of geometric invariances) to serve as an explainable baseline model of nanonetworks against which experimentalists can compare more sophisticated models (deep neural networks or physics-based models such as the lin-min network introduced here) and provides ground for designing novel approximate hardware and a statistical mechanics analysis of the learning performance of interconnected nanoclusters versus perceptrons (where neurons output a nonlinear function of the weighted-sum of their inputs). A network with just ten higher-order neurons is shown to achieve a classification accuracy of more than 96% on the MNIST benchmark for handwritten digit recognition (which required 100 times more neurons in three-layer perceptrons).

Stripe Noise Removal in Scanning Probe Microscopy

Mian Li, Jan Rieck, Beatriz Noheda, Jos B.T.M. Roerdink, Michael H.F. Wilkinson

Generally, all SPM (Scanning Probe Microscope) scans can be prone to artifacts arising from different experimental effects. The most probable reasons for stripe noise in a SPM scan are dirt or water adhering to the tip, tip degradation due to mechanical wear or unintended surface modification by the tip. In cAFM (conduction Atomic-Force Microscope), artifacts related to electrical effects also need to be taken into account. These include degeneration of the conductive tip coating, tip temperature increase due to Joule heating or tip damage due to too high currents. Unless these artifacts can be avoided by sample preparation and measurement parameters, image filtering techniques are needed to improve the scan quality.

Towards Advancing TMDC-Based Memristive Devices

Anna Linkenheil, Hendrik Groß, Ole Gronenberg, Levkovski, Lorenz Kienle,
Frank Schwierz, Martin Ziegler

Transition metal dichalcogenides (TMDCs) are promising materials for memristive devices. In particular, few-layer-TMDCs have advantageous properties such as excellent scaling behavior and the potential for an easy integration into a planar wafer technology. In this contribution, both electrical and material property analyses of devices based on sputtered molybdenum disulfide (MoS2) are assessed. Different electrode materials and their respective influences are evaluated, consequently showing that sputtered MoS2 is not suitable for 2D-layer low variability device technology. Furthermore, new strategies to use chemical vapor deposition (CVD) and atomic layer deposition (ALD) techniques for the supply of the TMDC material tungsten disulfide (WS2), as well as more complex systems, are presented.

Phase-Change Properties of Ultrathin PLD-Fabricated Ge_xSb_{100-x} Thin Films

Jesse Luchtenveld, V.P. Jonnalagadda, V. Bragaglia, A.J.T. van der Ree,
B.J. Kooi, G.S. Syed, A. Sebastian

In this work, we produced several pulsed laser deposition targets in-house, which were used to deposit ultrathin (< ~10 nm) GexSb100-x thin films of two compositions. The extent of phase separation was investigated by heating the as-deposited amorphous films, capped with lanthanum aluminate (LaAlO3), in a vacuum to 395°C. The films were then inspected with scanning transmission electron microscopy (energy dispersive X-ray spectroscopy) and X-ray diffraction for phase-separation. We found the composition with a Ge content of more than 5 at. % to phase separate, but not the composition with less than 5 at. % Ge. In a follow-up of an analysis of Sb [1], the crystallization temperature as a function of film thickness was also assessed by means of ellipsometry measurements. A clear increase in crystallization temperature with a reduction of film thickness was observed, although the scaling is less aggressive with a higher Ge content. Finally, the electrical contrast between the (as-deposited) amorphous and crystalline phases has been studied for the two compositions, where the same thickness-dependent scaling of the crystallization temperature was observed.

[1] D.T. Yimam & B.J. Kooi, ACS Appl. Mater. Interfaces 14 (2022) 13593.

From Biological Memory to Artificial Memory - Learning in the Slime Mold *Physarum polycephalum* and its Memristive Behaviour in Hybrid Computing

Roshani Madurawala, Jannes Freiberg, Maik-Ivo Terasa, Sören Kaps,
Rainer Adelung, Christian Kaernbach

Neuromorphic systems can be applied to several use-cases. One of the tasks in which neuromorphic can be useful is the acquisition of data from the physical world, specifically in the case of extreme edge computing. The signal is converted directly from analog to spikes, using event-driven conversion at the very edge of the sensor. For each variation of the sensed signal the system responds with a spike, no data is produced if no change is detected. The spikes created in this manner reflect the analog value of the sensor and can be therefore used for computation. We propose a neural architecture for solving a complex tactile task, such as grasping. In this architecture several features of the sensed signal can be extracted by dedicated neural networks. The output of these networks can be integrated to generate a complex understanding of tactile data and support close-loop interaction with the sensed environment.

Neuromorphic Extreme Edge Computing for Touch Sensors

Michelle Mastella, Elisabetta Chica

Neuromorphic systems can be applied to several use-cases. One of the tasks in which neuromorphic can be useful is the acquisition of data from the physical world, specifically in the case of extreme edge computing. The signal is converted directly from analog to spikes, using event-driven conversion at the very edge of the sensor. For each variation of the sensed signal the system responds with a spike, no data is produced if no change is detected. The spikes created in this manner reflect the analog value of the sensor and can be therefore used for computation. We propose a neural architecture for solving a complex tactile task, such as grasping. In this architecture several features of the sensed signal can be extracted by dedicated neural networks. The output of these networks can be integrated to generate a complex understanding of tactile data and support close-loop interaction with the sensed environment.

Synthesis, Analysis and Design of Memristively Coupled Oscillators

Bharath Kumar Singh Muralidhar, Bakr Al Beattie, Karlhainz Ochs, Max Uhlmann,
Mamathamba K. Mahadevaiah, Christian Wenger, Gerhard Kahmen

We know that coupled neurons exhibit oscillatory behaviour. Hence, we want to study the effects of coupling delay on synchrony between coupled oscillators. This will help us build a spiking artificial neural network. We have designed a ring oscillator depicting as neuron in CMOS technology. The coupling element we will investigate is a memristor due to their simple two-terminal structure and customizable switching mechanisms. Also, its CMOS compatibility helps in scaling up the neural network.

A Wireless Brain Recording System for Reptiles

Kamran Naderi Beni, Robert Rieger

In this project, an electrophysiological recording setup is designed to study the in-vivo brain activities of reptiles. This system records the local field potential of *Anolis*' brain activities in the Department of Psychology. *Anolis* is a genus of reptiles and these iguanian lizards are small with a low body mass. The *Anolis* is 12 to 20 centimeters in length and has a sharp nose and, a narrow head. These characteristics require innovation in the system design, including electrode choice, acquisition stage design as well as data transmission and storage when an untethered setup is envisioned. The highly miniaturized system records the local field potential of extracellular space in *Anolis*' brain. The recorded data is transferred by a Bluetooth module to the main stage for the subsequent signal processing.

Neuronal Network Formation in *Hydra* and Concepts for Modelling

Christopher Noack, Sebastian Jenderny, Dijana Pavleska, Wilhelm Braun, Claus C. Hilgetag, Alexander Klimovich, Karlheinz Ochs, Thomas Bosch

The cnidarian polyp *Hydra* possesses one of the earliest developed nervous systems. Its highly dynamic nerve net consists of a few thousand neurons organised into several subpopulations which can be distinguished by their molecular architecture and gene expression profiles. One of the main advantages of *Hydra* is its experimental accessibility and relatively simple life cycle. This makes it possible to study complex processes such as the development of the first neuronal circuit in *Hydra*. From an engineering perspective, understanding nervous system development might lead to new design principles for electrical circuits, which would aid in the development of new energy - efficient technology. In this context, we present data on the emergence and formation of *Hydra*'s nervous system, based on which we develop two generative models for the network formation: One for only a few neurons and one for several hundred neurons. We then outline next steps to incorporate experimentally measured data into these models to start the process of a theory-experiment interaction loop.

Relaxation-Type Oscillators Coupled during Nanoparticle Network Growth

Maximiliane Noll, Blessing Adejube, Niko Carstens, Tom Birkoben, Thomas Strunskus, Franz Faupel, Alexander Vahl, Hermann Kohlstedt

Avalanche behavior is common to many physical phenomena, such as magnetic systems, earthquakes and brain dynamics at the critical region of phase transitions and was first described by Bak et al. [1]. The common feature of all these systems is slow external driving, causing an intermittent, widely distributed response. Recently nanoparticle networks (NPNs) poised at the percolation threshold attracted considerable interest as a model system for brain-like dynamics [2,3]. So far NPNs have been studied in context with their activity pattern, however, coupling with neuron-like oscillatory components has not been considered yet. In this work, we present results on the dynamics of relaxation-type oscillators coupled during the fabrication of Ag-based NPNs. By using a gas aggregation source, the nanoparticles are steadily deposited, while the junctions between deposited particles redistribute and decrease until the percolation threshold is reached. The state of synchrony of the relaxation-type oscillators changes with the network resistance during deposition and around the percolation regime the oscillators synchronize. The resulting nanoparticle network with oscillator influence is analyzed by scanning electron microscopy.

[1] Bak et al. Phys. Rev. Lett. 59.4 (1987): 381
[2] J. B. Mallinson et al. Sci. Adv. 5.11 (2019): eaaw8438
[3] Z. Kuncic et al. Adv. in Phys. X 6.1 (2021): 1894234

Establishment and Maintenance of the Nerve Network in *Hydra*

Dijana Pavleska, Wilhelm Braun, Claus C. Hilgetag, Alexander Klimovich

We explore the topology-activity relations in a unique biological system – the nervous system of the non-senescent polyp *Hydra*. *Hydra*, as one of the most ancient animals that possesses a nervous system, have great potential for revealing the fundamental design principles of neural circuits. Currently, we are combining imaging of transgenic polyps and computational modelling based on cellular automaton simulations to gain insight into the dynamic homeostasis of the *Hydra* nervous system. We investigate how a continuous turnover of cells with a finite lifetime enables an everlasting persistence, uninterrupted activity of the nervous system and a stable behavior repertoire of an adult *Hydra*. Furthermore, we strive to establish common fundamental principles of network architecture and dynamics that may inform unique design concepts for the development of dynamic electronic circuits.

A Mixed Signal CMOS Interpretation of Learning by the Dendritic Prediction of Somatic Spiking

Ole Richter, Michelle Mastella, Willian Soares Girão, Ella Janotte, Hugh Greatorex, Madison Cotteret, Elisabetta Chicca

In Neuromorpic Engineering research, biologically inspired plasticity and learning rule research has a long tradition. Urbanczik and Senn [1] present a computational learning rule model with very attractive features for hardware implementation: local update computation, co-location of memory and processing, no differentiation between learning and recall phases and learning regression task capability. We adapted the computational model to a sub-threshold mixed signal 180nm CMOS circuit and implemented an array with 8 exponential integrate and fire somas with 64 second order low pass filtered conductance synapses each. The bi-stable nature in the synapses circuits improves the weight stability and makes the noisy hardware implementation robust. The in build stop learning mechanism for small errors combined with a nudging conductance teacher enable a stateless continuous learning implementation. We simulated the circuit design and applied it to the regression task of learning the generation of a sine wave from repeating random input patterns [1]. We are currently replicating the promising simulation results in hardware measurements.

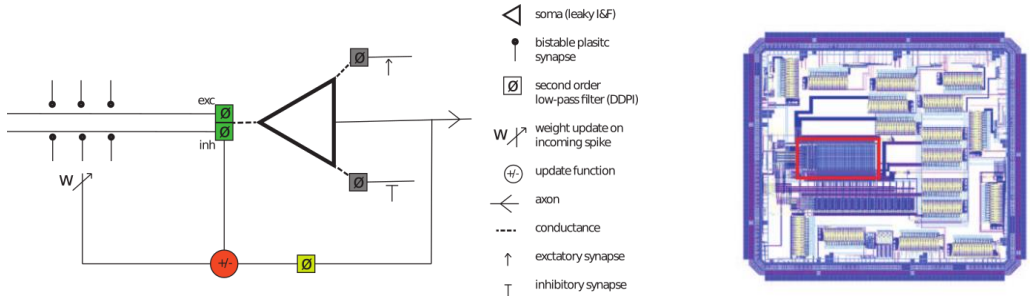

(a) (b)

Figure 1: (a) The diagram of a single Neuron as implemented in CMOS on the chip cognigr1. 31 excitatory bi-stable and 31 inhibitory bi-stable synapses are connected to individual random spike trains of 42 Hz, the spike trains are periodically repeated every 200 ms. the synaptic current is low-pass filtered by a second order low-pass filter (SoDPI) to emulate excitatory/inhibitory postsynaptic current (EPSC/IPSC) behaviour. An additional excitatory and inhibitory teacher signal are supplied via separate SoDPIs. Both teacher and synaptic current are supplied to the neuron via a transconductance circuit to an integrate-and-fire soma. The update rule uses the second order low pass filtered spike train of the soma, compares it to the combined EPSC and IPSC of the plastic synapses, and triggers an update on an incoming spike to the corresponding synapse. (b) A picture of the chip cognigr1 CMOS layout. The red box encloses the array of 8 neurons and 512 synapses with its asynchronous dataflow communication infrastructure, implementing the learning rule 8 times.

[1] Robert Urbanczik and Walter Senn. Learning by the dendritic prediction of somatic spiking. Neuron, 81(3):521–528, Feb 2014. ISSN 0896-6273. doi: 10.1016/j.neuron.2013.11.030. URL https://doi. org/10.1016/j.neuron.2013.11.030.

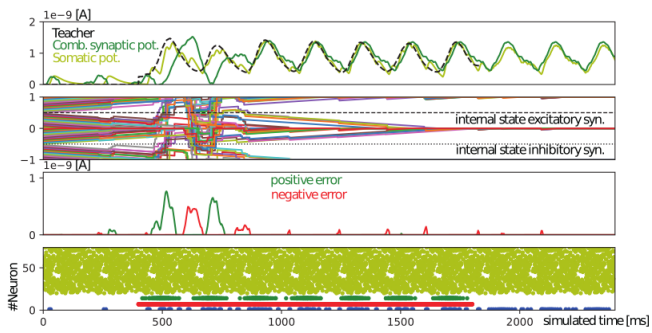

Figure 2 (right): A simulation based on circuit equations of the CMOS implementation. The regression task replicated taken from Urbanczik and Senn (2014), a sign wave is taught to the neuron, it has to recreateit out of random spike trains repeating in the same period of 200ms. In this case after 3 repetitions the error between the somatic and the synaptic current is so small that there is no longer accumulation evidence in the bi-stable internal state to switch the synapses on or off. It retains the pattern after the teacher is taken away after 7 repetitions. The average frequency of the neuron (blue) is approx.100Hz.

Ferroelastic Domain Walls in $BiFeO_3$ as Memristive Networks

Jan Rieck, Davide Cipollini, M. Salverda, C.P. Quinteros, Lambert R.B. Schomaker, Beatriz Noheda

The emerging field of neuromorphic computing comprises novel electronic circuits inspired by the human brain, motivated by its strikingly low energy consumption and high efficiency to perform cognitive tasks. Prominent candidates enabling these properties on a hardware-level are ferroic materials. An intrinsic feature of all ferroic materials is the occurrence of domain walls (DWs) separating domains, the latter being regions with homogeneous orientation of the order parameter such as electric polarization in the case of ferroelectrics for example. In multiferroic BiFeO3, these DWs self-assemble at the growth phase, providing a highly-dense DW network. Enhanced conduction and memristive behavior has been previously shown vertically for individual DWs in BiFeO3. However, demonstrating electronic conduction through the network itself has proven to be very challenging. In this work, we report scanning probe experiments on BiFeO3 DWs, proving lateral conduction and memristive properties across the DW network (wall to wall), thus presenting a milestone towards the use of these systems in brain-inspired devices.

Allocentric Spatial Learning in the Lizard *Anolis carolinensis*

Niels Röhrdanz, Peer Wulff

Across species spatial navigation plays a crucial role in everyday life. In order to navigate through space different navigation strategies are used. One of these is allocentric navigation. In allocentric navigation the location of a goal is encoded in relation to the location of a set of contextual reference elements. The ability of allocentric spatial learning has not been investigated in *Anolis carolinensis* yet. Here we have developed a T-maze protocol for incremental spatial refence memory in lizards and have used it to test the ability of *Anolis carolinensis* to use allocentric learning strategies for navigation. Five lizards were used in this experiment. Once a day each lizard was placed in the start-arm of the T-maze for 25 minutes. One of the arms orthogonal to the start-arm was food rewarded. The animals task was to enter the rewarded arm. The learning criterion was set to 4 correct trials (correct arm entries without having visited the non-rewarded arm before) within 5 days. Three out of five lizards reached criterion within 20 days (M = 12.67, SD = 4.16). Directly after reaching the criterion the rewarded arm was switched to the opposing arm in the T-maze to test for behavioural flexibility. Two out of the three animals were able to learn the new position of the rewarded arm within another 20 days (M = 7.00, SD = 1.41) and thus showed reversal learning. These experiments show the ability of *Anolis carolinensis* to use allocentric strategies for spatial navigation.

Tuning of Bioinspired MEMS Resonator for Acoustic Sensing

Folke Rolf, Vishal Gubbi, Kalpan Ved

Thermally actuated cantilevers are a potential candidate to mimic the dynamical behavior of the cochlea. This comes from the fact that feedback mechanisms drive the cantilever to an Andronov Hopf bifurcation which induces compressive nonlinearity and a sharp frequency response in the subthreshold regime. These characteristics represent the dynamical behavior of cochlea. Addition ally, Andronov Hopf bifurcation can be induced by coupling the cantilevers to each other resulting in either a broader or a sharp, variable frequency response and enhanced sensitivity.Further, we discuss the fabrication and design simulations of silicon based MEMS tunable resonators for acoustic sensing using integrated piezoresistive deflection sensing and thermomechanical actuation. The dynamics of the system can be described by Duffing equation which is given by:

$$\ddot{x}+c\dot{x}+(k1+k3x2)x = F(\sin\omega)$$

Vibrometers are used to measure the vibrations of micromechanical beam structures. Preliminary results demonstrate that the mechanical frequency and microbeam non linearity can be tuned by controlling the bending induced nonlinear spring constant.

Memristor-Based Cognitive and Energy Efficient In-Network Processing

Saad Saleh, Boris Koldehofe

Enabling communication in the Internet heavily depends on programmable match-action processors. Match-action processors in switches and routers match Internet traffic, i.e., header information of incoming IP packets, against locally available network rules to perform actions such as forwarding, modifying, and filtering Internet traffic. Match-action processing must be performed at high speed, i.e., commonly within one clock cycle. Building on transistor-based designs, state-of-the-art architectures, e.g., Ternary Content Addressable Memory (TCAM), have high energy consumption and lack cognitive functionality for performing appropriate actions. In this research, we demonstrate findings on enhancing match-action processors with memristors. We propose a novel memristive design for TCAM which enables more energy-efficient and cognitive operations on Internet traffic at the same processing rate of one clock cycle. We analyze its performance over Nb-doped SrTiO3-based memristor. Our analysis shows promising improvements in power consumption of 16 µW and 1 µW for match and mismatch operations along with twice the improvement in resources density to traditional architectures.

Lead-sulfide Quantum Dot Synaptic Transistors Do Ligands Change Neuromorphic Properties?

Karolina Tran, Meike Pieters, Han Wang and Maria Antonietta Loi

Devices with solution-processable materials often exhibit current hysteresis, a manifestation of charge trapping. This makes them unsuitable for application in CMOS-based electronics, where performance invariance is crucial. However, history-dependent performance can be utilized in neuromorphic engineering, where current hysteresis is one of the characteristics used to mimic biological systems in artificial devices [1]. One type of such material is colloidal quantum dots (CQDs). In this work, we study lead sulfide CQDs with two different ligands and apply them in field-effect transistors as an active material. The ligands are essential for CQDs stability, but they may also influence the electrical performance of fabricated devices. We perform paired-pulse facilitation measurements under different conditions and spike-time-dependent plasticity to characterize the neuromorphic properties of the studied devices.

[1] W. Lin et al., "Nonvolatile Multilevel Photomemory Based on Lead-Free Double Perovskite Cs2AgBiBr6 Nanocrystals Wrapped Within SiO2 as a Charge Trapping Layer," ACS Appl. Mater. Interfaces, vol. 12, no. 39, pp. 43967–43975, Sep. 2020, doi: 10.1021/acsami.0c12185.

Simulation of Free Surface Flows with Shallow Water Moment Models

Rik Verbiest, Julian Koellermeister

The recently derived Shallow Water Moment Equations (SWME) are an extension of the Shallow Water Equations, in which it is assumed that the lateral velocity is constant over the water height. The SWME allow for vertical changes in the horizontal velocity. Unfortunately, these models lack global hyperbolicity. We derive two-dimensional hyperbolic SWME by modifying the system matrix. The goal is to obtain models which allow for accurate simulation of free-surface flows like tsunamis, avalanches and floods. Numerical simulations of dam break problems and smooth test cases yield accurate results while guaranteeing hyperbolicity. We show that the 2D hyperbolic SWME contain stable and unstable equilibrium states. A formulation of the SWME in cylindrical coordinates is presented. A hyperbolic system for axisymmetric flow is derived. The model is briefly tested with some simple numerical simulations. A radial dam break problem scenario is considered and the hyperbolic system yields accurate results.

Understanding Resistive Switching in Memristive Devices through Physics-Based Modelling

Sahitya Yarragolla, Torben Hemke, Luca Vialetto, Jan Trieschmann, Thomas Mussenbrock

Memristive devices belong to a new class of resistive devices and are considered promising candidates for future nanoelectronic applications. The development of existing and new memristive devices requires a precise understanding of their physical behaviour. It is often challenging to determine the exact switching mechanism using experimental procedures or diagnostic methods. Therefore, simulation models are developed that can contribute significantly to understand the behaviour of such devices. On the one hand, multi-dimensional computational models may be exploited for an in-depth understanding of the resistive switching in such devices. On the other hand, less computationally demanding compact models may be used within circuit simulations. In this work, two specific resistive switching devices and their modelling approaches are presented. First, a physics-based 1D compact model of the interface type memristive device is discussed for hardware security applications. Second, a 2D model for understanding the switching in brain-like percolating networks of nanoparticles is presented.

Exhibition of the Science Outreach Project (SOP) of CRC 1461

Materials for Science Outreach on the Topics of Neurogenesis, *Hydra*, *Tripedalia cystophora,* and Synchronization in Biological Systems

Isabella Beyer, Daniel Sacristán

The science outreach project presents the produced media elements on the topics of Neurogenesis, the Hydra, the *Tripedalia cystophora*, and synchronization in biological systems (fireflies). The materials include two augmented reality posters, two traditional posters, a projection of footage of the natural habitat of the *Tripedalia cystophora*, and a virtual reality application about the synchronization of fireflies. These formats will be evaluated with respect to their capacity to transmit the scientific content to the different target groups and their capacity to foster the exchange and collaboration between scientists of different areas. The SOP aims to reconstruct the research questions, scientific methods and technological developments for the design of effective outreach formats and environments. The project addresses different groups of non-experts, mainly the general public and school students as future citizens and scientists, but also (junior) researchers within the CRC.

Insights into the Basic Research of the CRC 1461 – A Student Laboratory Program

Insa Stamer, Ilka Parchmann, Isabella Beyer, Daniel Sacristán

Out-of-school learning environments like student laboratories are suitable for spreading the scientific content of the CRCs. The poster is supposed to sum up general information about student laboratories. It also presents a new and specifically for the CRC 1461 developed student laboratory program. One of overall six experiments is displayed next to the poster.

neuro klick!:labor

Invited Speaker Talks

Criticality in Self-Organised Nanoscale Networks

Simon Brown

The MacDiarmid Institute for Advanced Materials and Nanotechnology, School of Physical and Chemical Sciences, University of Canterbury, Christchurch, New Zealand

Neuronal avalanches are one of the key characteristic features of signal propagation in the brain. These avalanches originate from the complexity of the network of neurons and synapses, which are widely believed to form a self-organised critical system. Criticality is hypothesised to be intimately linked to the brain's computational power but efforts to achieve neuromorphic computation have so far focused on highly organised architectures, such as integrated circuits and regular arrays of memristors. To date, little attention has been given to developing complex network architectures that exhibit criticality and thereby maximise computational performance. We show here, using methods developed by the neuroscience community, that electrical signals from self-organised percolating networks of nanoparticles exhibit brain-like correlations and criticality. Specifically, the sizes and durations of avalanches of switching events are power-law distributed, and the power-law exponents satisfy rigorous criteria for criticality. We also show that both the networks and their dynamics are scale-free, and employ sophisticated simulations to model the critical behaviour and to evaluate practical issues such as the impact of the contact configuration in real devices. Further, we show that, when measured on microsecond timescales, spiking from individual 'neurons' can be identified, which allows the devices to be used for high quality random number generation. Finally, we discuss applications of these networks as low-cost platforms for computational approaches that rely on spatiotemporal correlations, such as reservoir computing.

Scientific Biography

Simon Brown received his PhD degree in Physics from the University of Cambridge in 1990. He was a Post-Doctoral Fellow at the University of New South Wales in Sydney and the University of British Columbia in Vancouver. Since 1998 he has been at the University of Canterbury in Christchurch, New Zealand, and in 2002 was a founding Principal Investigator in the MacDiarmid Institute for Advanced Materials and Nanotechnology, which is a national Centre of Research Excellence. His current work focuses on nano-electronic devices with brain-like properties and on topological nanostructures. Simon holds a number of patents and was founder of NZ's first nanotechnology company.

Life at the Edge: Complexity and Criticality in Biological Function

Dante R. Chialvo

Center for Complex Systems & Brain Sciences (CEMSC3) & Instituto de Cien-cias Físicas (ICIFI), Universidad Nacional de San Martin (UNSAM), Argentina

Why life is complex and --importantly-- what is the origin of the over abundance of complexity in nature. This is a fundamental scientific question which, para-phrasing the late Per Bak, “is screaming to be answered but seldom is even be-ing asked”. In this lecture we review successful attempts to understand the ori-gins of complex biological problems from the perspective of critical phenomena.

Scientific Biography

Dante R. Chialvo is Full Professor of Medical Physics at the Universidad Nacional de San Martin (UNSAM) in Argentina where he leads the Center for Complex Systems & Brain Sciences and co-directs the Institute of Physical Sciences. His career spans more than two decades at top Universities throughout the globe, including SUNY, (New York), Northwestern University (Chicago), UCLA at Los Angeles and the Santa Fe Institute (New Mexico) among others. He has published extensively on the dynamics of complex phenomena in biology. In neuroscience, Dr. Chialvo’s is known for his work dedicated to understand the large-scale organisation of the brain in health and disease and the development of mathematical tools to better describe the state of mind. In the 90’s, together with the late Per Bak, he spread the study of brain dynamics as a critical phenomena. He is a Fulbright US Scholar (USA), a Marian Smoluchowski Professorship (Jagielloni-an Univ., Poland) an elected Fellow of the American Physical Society (USA), and of the Academia de Ciencias de Latin America (ACAL).

Organic Neuromorphic Electronics for Learning and Bio-Interfacing

Paschalis Gkoupidenis

Max Planck Institute for Polymer Research, Mainz, Germany

Artificial intelligence applications have demonstrated their enormous potential for complex processing over the last decade. However, they are mainly based on digital operating principles while being part of an analogue world. Moreover, they still lack the efficiency and computing capacity of biological systems. Neuromorphic electronics emulate the analogue information processing of biological nervous systems. Neuromorphic electronics based on organic materials have the ability to emulate efficiently and with fidelity a wide range of bio-inspired functions. A prominent example of a neuromorphic device is based on organic mixed conductors (ionic-electronic). Neuromorphic devices based on organic mixed conductors show volatile, non-volatile and tunable dynamics suitable for the emulation of synaptic plasticity and neuronal functions, and for the mapping of artificial neural networks in physical circuits. Finally, small-scale organic neuromorphic circuits enable the local sensorimotor control and learning in robotics.

Scientific Biography

Paschalis Gkoupidenis has a BSc in Physics from the University of Ioannina (2005), an MSc in Microelectronics from the University of Athens (2007) and a PhD in Materials Science from NCSR “Demokritos”, Athens, Greece (2014). During his PhD, his research focused on ionic transport mechanisms of organic electrolytes. In 2015 he started his postdoc at the Department of Bioelectronics (EMSE, France), where, he worked on the design and development of organic neuromorphic devices based on electrochemical concepts. In 2017, Gkoupidenis joined the Max Planck Institute for Polymer Research (MPIP, Mainz, Germany), and he is currently a Group Leader at the Department of Molecular Electronics. The research in his group focuses on the field of Organic Neuromorphic Electronics.

Material Computing: Fruits need Roots

Herbert Jaeger

Groningen University – CogniGron, Groningen, The Netherlands

In material (or physical or unconventional or…) computing we can already serve and relish a number of material demonstrations. These fruits are diverse and some are exotic, based on substrates as different as DNA sniplets, fungi, silicon nanobeams, or gold particle films; and they exploit very different physical phenomena, like energy minimization in collective systems, coupled mechanical oscillations, phase transitions, quantum state interactions, or reaction-diffusion processes. – Looking at digital computing, we see that its long-lasting, prosperous development is safely rooted in unifying and abstract theory: automata theory and formal languages, Turing computability, Boolean and other symbolic logics. These theory branches are transparently interconnected and taught to computer science students worldwide always in the same canonical format. The unifying invariant across all these sub-theories is the concept of discrete symbol structures. – In order to make material computing stand confidently side by side with digital computing, it has been observed that an “over-reaching formalism ... may be desirable” (Stepney and Hickinbotham, 2018). I will argue that it is not merely desirable but critically needed; and that it will not be a single formalism but a system of interconnected formalisms which only together give guidance for practical system engineering pipelines from nanoscale phenomena to physical system design to system interfacing to task specifications to societal impact assessment. I will propose a theory organigram, pinpointing which sub-theories would be needed to fill which roles in a future engineering science of material computing; and I will try to explain my intuitions about mathematical objects which could generalize discrete symbol structures, yielding the conceptual invariant to tie it all together.

Scientific Biography

Herbert Jaeger studied mathematics and psychology at the University of Freiburg and obtained his PhD in Computer Science (Artificial Intelligence) at the University of Bielefeld. After a 5-year postdoctoral fellowship at the German National Research Center for Computer Science (Sankt Augustin, Germany) he headed the "Intelligent Dynamical Systems" group at the Fraunhofer Institute for Autonomous Intelligent Systems AIS (Sankt Augustin, Germany). From 2003 to 2019 he was Associate Professor for Computational Science at Jacobs University Bremen, and since 2019 he is Full Processor for Computing in Cognitive Materials at the University of Groningen. His current research revolves around formal theory-building for non-digital computing**.**

Neuromorphic Dynamics and Information Processing in Nanowire Networks

Zdenka Kuncic

School of Physics, Sydney Nano Institute, and Centre for Complex Systems, University of Sydney, Australia

Artificial Intelligence (AI) is often described as inspired by the human brain, but the ability of AI to find patterns in big data could arguably be described as super-human: the brain is simply not designed for brute-force iterative optimisation at scale. Rather, the brain excels at processing information that is sparse, complex and changing dynamically in time. Neuromorphic computing is another brain-inspired approach that aims to emulate neuronal spikes in electronic hardware to achieve low-power computing. Another neuromorphic hardware approach instead emulates synapse-like behaviour, exhibited by resistive memory (memristive) switching across a nanoscale electrical junction. In this talk, I will present on a unique inorganic system – nanowire networks - that exhibit both spike-like and synapse-like responses when electrically stimulated. I will describe the neural network-like connectivity and brain-like dynamics, including avalanche criticality, that we have found to date and explain how we harness the emergent dynamics to perform learning tasks. Key results include demonstrating optimal information processing when nanowire networks are driven into an edge-of-chaos dynamical regime and demonstration of working memory based on the n-back task from cognitive neuroscience. I will also briefly describe some new work currently in progress developing a mean field approach to analysing neuromorphic nanowire networks and testing for evidence of symmetry breaking.

Scientific Biography

Zdenka Kuncic studied Physics at the University of Sydney and received her PhD degree in Theoretical Astrophysics (1996) at the University of Cambridge, UK. Shortly after commencing a Post-Doc at the Australian National University, she was awarded an 1851 Royal Commission International Research Fellowship in Science and Engineering (1997-99), which she undertook at the University of Victoria, BC, Canada, pursuing research on the physics of accretion and radiative phenomena associated with supermassive black holes. After a career break, she resumed research in astrophysics and space science at the University of Sydney, where she has been since 2000. Motivated by the unique capacity of physics to contribute to interdisciplinary research, she pivoted her activities towards medical and biological physics in the late 2000s. She has since made significant contributions to medical imaging physics, radiation biophysics, systems biology, and nanotechnology in medicine, for which she was awarded an Australia-Harvard Research Fellowship in 2017. She was also a 2020 Fulbright Future Scholar, awarded for her research on brain-inspired computing, where her research focuses on harnessing nonlinear dynamics emerging from networks of functional nanoscale structures for neuro-inspired learning.

Material Learning in Dopant Network Processing Units

Wilfred G. van der Wiel

BRAINS Center for Brain-Inspired Nano Systems, MESA+ Institute for Nanotechnology, University of Twente, P.O. Box 217, 7500 AE Enschede, The Netherlands
2Institute of Physics, University of Münster, Münster, Germany

Our goal is developing intelligent matter and systems/devices based upon them for information processing. Intelligent matter in this context is defined as matter that incorporates sensing, actuation, feedback (network property) and long-term memory, enabling learning [1]. In particular, we focus on disordered ('designless') nanoscale material networks that exhibit complex behavior in the form of a tuneable nonlinear electronic response. By using a multi-terminal layout, we are able to apply multiple input, output and configuration signals. While the systems do not exhibit any a priori functionality, through the process of *material learning*, we will realize desired functionality *a posteriori*. By exploiting the nonlinearity of a nanoscale network of boron dopants in silicon, referred to as a dopant network processing unit (DNPU), we can significantly facilitate classification. Using a convolutional neural network approach, it becomes possible to use our device for handwritten digit recognition [2]. An alternative material learning approach is followed by first mapping our DNPU on a deep-neural-network model, which allows for applying standard machine-learning techniques in finding functionality [3]. Finally, we show that kinetic Monte Carlo simulations of electron transport in DNPUs can be used to reproduce the main characteristics and to depict the charge trajectories [4].

[1] C. Kaspar et al., Nature 594, 345 (2021).
[2] T. Chen et al., Nature 577, 341 (2020).
[3] H.-C. Ruiz Euler et al., Nature Nanotechnol. 15, 992 (2020).
[4] H. Tertilt, J. Bakker, M. Becker, B. de Wilde et al., Phys. Rev. Appl. 17, 064025 (2022).

Scientific Biography

Wilfred G. van der Wiel (Gouda, 1975) is full professor of Nanoelectronics and director of the BRAINS Center for Brain-Inspired Nano Systems at the University of Twente, The Netherlands. He holds a second professorship at the Institute of Physics of the Westfälische Wilhelms-Universität Münster, Germany. His research focuses on unconventional electronics for efficient information processing. Van der Wiel is a pioneer in Material Learning at the nanoscale, realizing computational functionality and artificial intelligence in designless nanomaterial substrates through principles analogous to Machine Learning. He is author more than 125 journal articles receiving over 8,000 citations.